DATAsheet

16P å•¡å•£çŽ¯

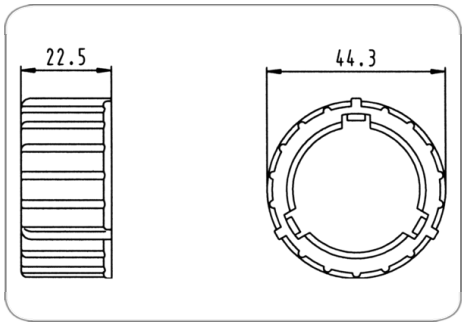

Art.Nr. Part. No.	047665

ä°§å“•ç¾¤	ç…§æ˜Žç³»ç»Ÿç„¡ä»¶, é…•ä»¶
å·¥ä¸š	å†œä¸š
èŠ¯æ•°	16
å¯¼ç¿æˆªé•¢é•¢ç§¯	4x 3,5mm + 12x 1,6mm
é€‚å•ˆäºŽ	æŽ¥è§¦å¥—ç-'å°§ï¼ˆç‰©æ–™ç¼–ç •ï¼šõ04
KEYWORDS	16P,Zubehör,047665