DATAsheet

2P/24V ç”µç¼†çº¿ (VG 96917)

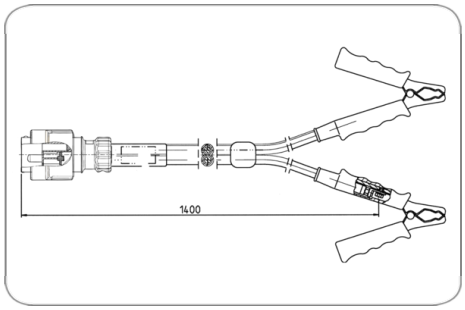

Art.Nr. Part. No.	651937

äº§å“•ç¾¤	ç”µç¼†
å·¥ä¸š	å†›ç”¨è½¦
èŠ¯æ•°	2
ç”µåŽ‹	24
æ ‡å‡†	VG 96917
æ•'å¤´è¿žæŽ¥æ•°é‡•	3
è®¾è®¡/ç‰ˆæœ¬	å–·æ²¹
åº§è°«æ••æ–™	é˜²æš´é‡'å±ž
åº§è°«é¢œè‰²	é»'è‰²
æŽ¥è§¦æ•'é¢œè‰²	é»'è‰²
æŽ¥è§¦ç‰ˆæœ¬	æŽ¥è§¦é'^
æŽ¥è§¦è¡¨é•¢	é“¶ï¼ˆAgï¼‰
ç”µç¼†ç°¿é•¿åº¦ï¼ˆç±³ï¼‰	1.4
ç”µç¼†ç°¿é¢œè‰²	é»'è‰²
å¯¼ç°¿æˆªé•¢é•¢ç§¯	2x 35mm²
ç®€ç‚Ÿ-æ••è¿°	å¸¦2P/24Væ•'å¤´,é…•èžºä¸•çŽ¯(ç¬¦å•ˆVG 96917)å'Œ2ä¸ª
Berechnete_Produktbezeichnung	2P/24V ç”µç¼†çº¿ (VG 96917)
KEYWORDS	2P,24V,Leitung,VG 96917,651937

ERICH JAEGER