DATAsheet

7P/24V «JAEGER Basic» æ•'åº§ (ISO 7638-1 ABS, EBS, ADR)

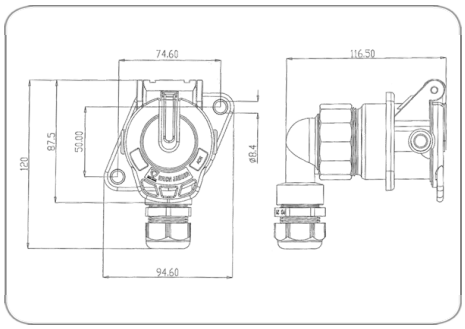

Art.Nr. Part. No.	141157

äº§å"•ç¾¤	æ•'åº§
å·¥ä¸š	å•†ç"¨è½¦
åº"ç"¨é¢†åŸŸ	ç‰µå¼•è½¦
èŠ¯æ•°	7
ç"µåŽ‹	24
æ ‡å‡†	ISO 7638-1
æ ‡å‡†è¡¥å……	ABS, EBS, ADR
å"•ç‰Œ	ERICH JAEGER
åŒ…è£…	PEè¢‹
åŒ…è£…å†…å®¹	æŒ¤åŽ‹è¿žæŽ¥æ–¹å¼•æŽ¥è§¦é´(2x 4.0mm² +
åº§èº«æ••æ–™	å¢žå¼ºåž‹å¤•å•ˆæ••æ–™
åº§èº«é¢œè‰²	é»'è‰²
ç«¯ç›–æ••æ–™	å¢žå¼ºåž‹å¤•å•ˆæ••æ–™
ç«¯ç›–é¢œè‰²	é»'è‰²
ç"µç¼†ç°¿å‡ºå•£	èžºæ¯•, 90°ç"µç¼†ç°¿å‡ºå•£
æŽ¥è§¦ç‰ˆæœ¬	å¸¦å¯†å°•æŽ¥è§¦é´ˆ
æŽ¥è§¦è¡¨é•¢	é••ï¼ˆNiï¼‰
æŽ¥è§¦ç«¯å-•	åŽ‹æŽ¥è§¦
å¯†å°•ç±»åž‹	èžºå¸½
é€‚ç"¨äºŽç"µç¼†ç°¿ç›´å¾„	7,00mm - 12,00mm
ä¿•æŠ¤ç-‰ç°§	IP X7, IP 54
ç®€çŸ-æ••è¿°	n.a.
Berechnete_Produktbezeichnung	7P/24V «JAEGER Basic» æ•'åº§ (ISO 7638-1 ABS, EB ADR)
Highlight	Yes
å"•ç‰Œ	JAEGER Basic
KEYWORDS	7P,24V,Steckdose,ISO 7638-1 ABS, EBS, ADR, JAEGER Basic,141157