DATAsheet

7P/24V «JAEGER Basic» æ•'åº§ (ISO 7638-1 ABS, EBS, ADR)

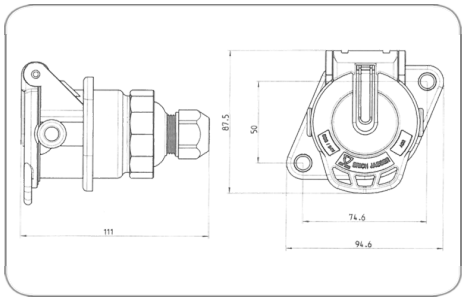

Art.Nr. Part. No.	141169

äº§å"•ç¾¤	æ•'åº§
å·¥ä¸š	å•†ç"¨è½¦
åº"ç"¨é¢†åŸŸ	ç‰µå¼•è½¦
èŠ¯æ•°	7
ç"µåŽ‹	24
æ ‡å‡†	ISO 7638-1
æ ‡å‡†è¡¥å……	ABS, EBS, ADR
ç‰¹æ®Šç‰¹æ€§	é¢œè‰²åŒºå^†,ä¾¿äºŽå®‰è£..
å"•ç‰Œ	ERICH JAEGER
åŒ…è£…	PEè¢‹
åŒ…è£…å†…å®	æŽ¥§¦æ•' (5x 1.5mm² + 2x 4.0mm²), èžºå¸½
åº§èº«æ••æ–™	å¢žå¼ºåž‹å¤•å•^æ••æ–™
åº§èº«é¢œè‰²	é»'è‰²
ç«¯ç›–æ••æ–™	å¢žå¼ºåž‹å¤•å•^æ••æ–™
ç«¯ç›–é¢œè‰²	é»'è‰²
ç"µç¼†ç°¿å‡ºå•£	èžºæ¯•, 180°ç"µç¼†ç°¿å‡ºå•£
æŽ¥§¦ç‰ˆæœ¬	å¸¦å¯†å°•æŽ¥§¦é'^
æŽ¥§¦è¡¨é•¢	é••ï¼^Niï¼‰
æŽ¥§¦ç«¯å-•	èžºç°¹æŽ¥§¦
å¯†å°•ç±»åž‹	èžºå¸½
é€‚ç"¨ä°Žç"µç¼†ç°¿ç›´å¾„	10,70mm - 12,30mm
ä¿•æŠ¤ç-‰ç°§	IP X7, IP 54
ç®€çŸ-æ••è¿°	n.a.
Berechnete_Produktbezeichnung	7P/24V «JAEGER Basic» æ•'åº§ (ISO 7638-1 ABS, EB ADR)
Highlight	Yes
å"•ç‰Œ	JAEGER Basic
KEYWORDS	7P,24V,Steckdose,ISO 7638-1 ABS, EBS, ADR, JAEGER Basic,141169