DATAsheet

# 5P/24V «JAEGER Basic» æ•'åº§ (ISO 7638-1 ABS, ADR)

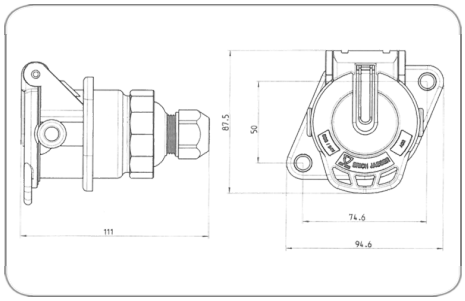


| | |
|---|---|
| Art.Nr.<br>Part. No. | 141170 |

| | |
|---|---|
| äº§å"•ç¾¤ | æ•'åº§ |
| å·¥ä¸š | å•†ç"¨è½¦ |
| åº"ç"¨é¢†åŸŸ | ç‰µå¼•è½¦ |
| èŠ¯æ•° | 5 |
| ç"µåŽ‹ | 24 |
| æ ‡å‡† | ISO 7638-1 |
| æ ‡å‡†è¡¥å…… | ABS, ADR |
| ç‰¹æ®Šç‰¹æ€§ | é¢œè‰²åŒºå^†,ä¾¿äºŽå®‰è£.. |
| å"•ç‰Œ | ERICH JAEGER |
| åŒ…è£… | PEè¢‹ |
| åŒ…è£…å†…å® | æŽ¥è§¦æ•' (3x 1.5mm² + 2x 4.0mm²), èžºå¸½ |
| åº§èº«æ••æ–™ | å¢žå¼ºåž‹å¤•å•^æ••æ–™ |
| åº§èº«é¢œè‰² | é»'è‰² |
| ç«¯ç›–æ••æ–™ | å¢žå¼ºåž‹å¤•å•^æ••æ–™ |
| ç«¯ç›–é¢œè‰² | é»'è‰² |
| ç"µç¼†ç°¿å‡ºå•£ | èžºæ¯•, 180°ç"µç¼†ç°¿å‡ºå•£ |
| æŽ¥è§¦ç‰ˆæœ¬ | å¸¦å¯†å°•æŽ¥è§¦é^ |
| æŽ¥è§¦è¡¨é•¢ | é••ï¼^Niï¼‰ |
| æŽ¥è§¦ç«¯å-• | èžºç°¹æŽ¥è§¦ |
| å¯†å°•ç±»åž‹ | èžºå¸½ |
| é€‚ç"¨äºŽç"µç¼†ç°¿ç›´å¾„ | 9,70mm - 11,30mm |
| ä¿•æŠ¤ç-‰ç°§ | IP X7, IP 54 |
| ç®€çŸ-æ••è¿° | n.a. |
| Berechnete_Produktbezeichnung | 5P/24V «JAEGER Basic» æ•'åº§ (ISO 7638-1 ABS, AD |
| Highlight | Yes |
| å"•ç‰Œ | JAEGER Basic |
| KEYWORDS | 5P,24V,Steckdose,ISO 7638-1 ABS, ADR,JAEGER Basic,141170 |